Bottom Loading

IGA International TEC

Loading Systems

Top Loading Systems

Bottom Loading Systems

Folding Stairways

Know how & consulting directly from manufacturer with decades of experience

That‘s why you choose... IGATEC International

- **Radial gaskets**
  Allow a maximum of feasible sealing materials and longer lifetime compared to axial gaskets

- **DUPLEX, SUPERDUPLEX, HASTELLOY, ALUMINIUM…**
  We machine all compatible materials

- **ASME, NACE, NORSOK, DIN…**
  We manufacture according to all required guidelines and directives

- **Customized connections**

- **IGATEC Swivel Joints**
  Made of carbon steel (e.g. St52-3, …) are nitrided to reach maximized hardness of surface and optimized corrosion protection at the same time

- **Certifications**
  TA-Luft
  VdS
  ISO 9001:2008

Headquarter

IGATEC GmbH &
IGATEC International GmbH
Siemensstraße 18
D-67346 Speyer

Phone:+49 (0)6232 91 904-0
Fax: +49 (0)6232 91 904-990
eMail: info@igatec.de

Subsidiary

IGATEC International GmbH
Profilstraße 6
D-58093 Hagen

Phone:+49 (0)2331 36 788-0
Fax: +49 (0)2331 36 788-11
eMail: info@igatec-international.de

Bottom Loading Systems

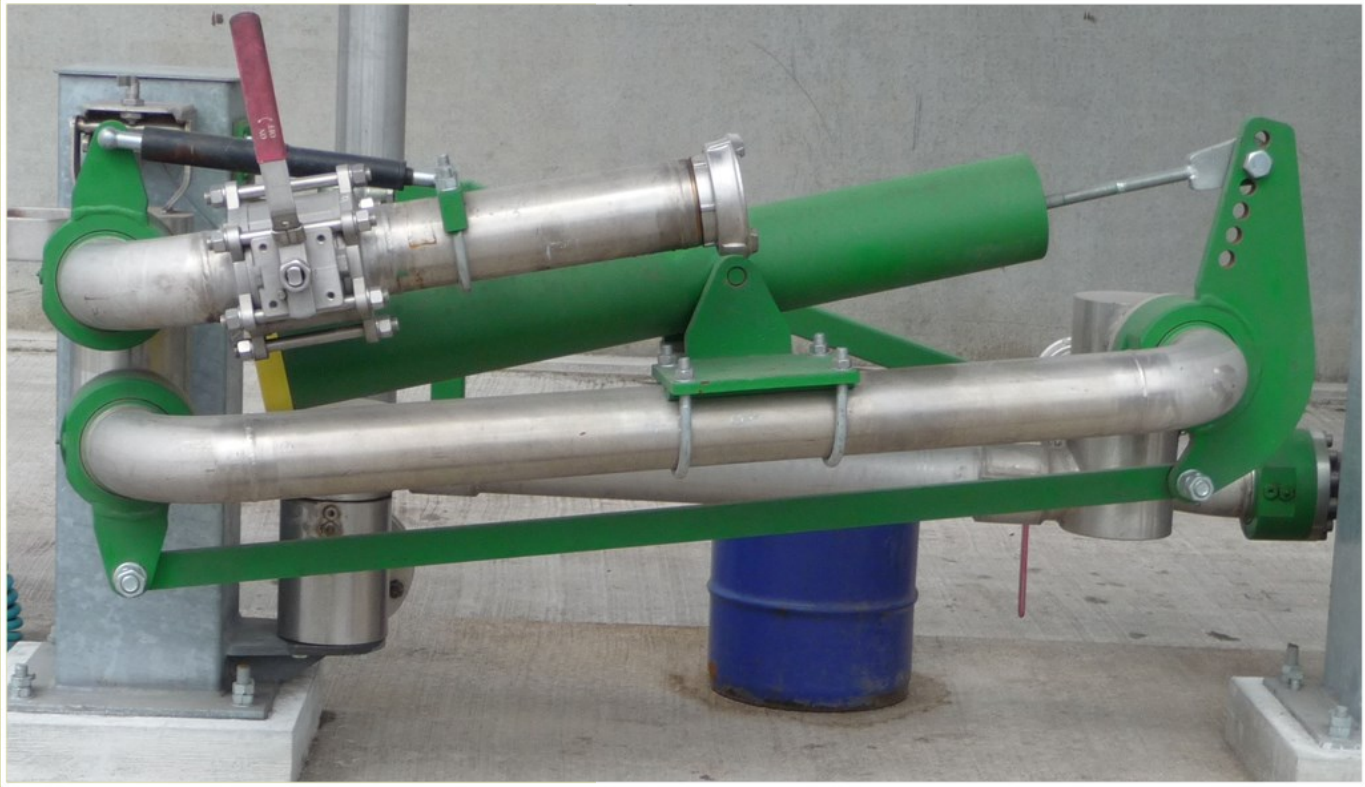

IGATEC Bottom Loading Systems are used for the safe and fast loading and unloading of railcars and road tankers from below.

Providing an appropriate choice of materials and components the loading of almost every liquid and gaseous fluid (mostly from chemical or petrochemical industry) is feasible.

IGATEC Bottom Loading Systems are characterized by a wide working range and high flexibility. Accurate positioning of vehicles is not necessary. Vehicles with different connecting positions can be served by the same loading arm as well.

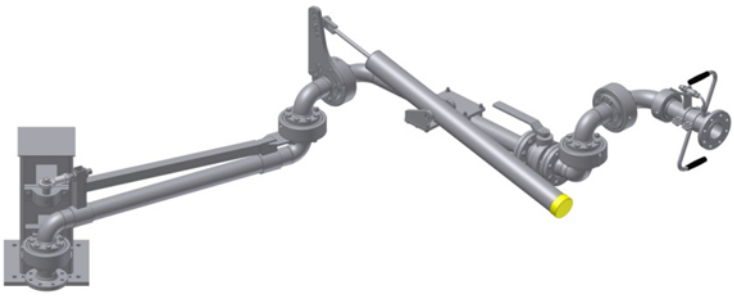

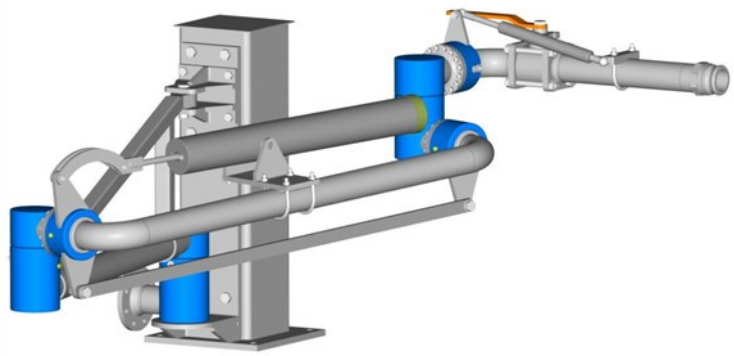

Bottom Loading Systems

The loading arms are connected to a pillar or beam (or similar).

After finishing loading the loading arm can be fixed in idle position by a safety notch. The easy use of bottom loading arms is guaranteed by integrated weight balancing systems. The operating stuff is able to move and position the system with very small effort.

The connecting interface of the loading arm to the vehicles to be filled is specified by the needed requirements for vehicle and products to be loaded.

Configuration of **IGATEC Bottom Loading Systems** is always according to customers' demands.

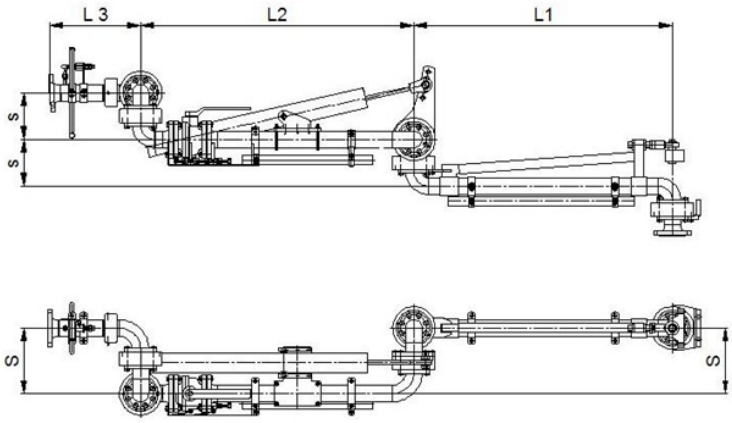

Bottom Loading Systems

Dimensions:

Nominal diameter	DN25 / **1"** bis DN100 / **4"**
Working pressure	**Vacuum up to** 40 bar / **580 psi**
Working temperature	-60°C up to 250°C / **-76°F up to 482°F**
Material	• Standard (1.4571, 25CrMo4) • Stainless steel • C-steel • Low temp. steel • PTFE
Control system	• Manually • Pneumatically • Hydraulically • Electrically
Control functions	• Lift / sink • Gate valve open / closed ⇒ Electrically ⇒ Pneumatically
Weight balance	• Without auxiliary energy ⇒ Balance Weight ⇒ Spring cylinder ⇒ Pneumatic cylinder ⇒ Gashydraulic torque compensation • Auxiliary energy operated ⇒ Pneumatic cylinder ⇒ Hydraulic cylinder ⇒ Electrically operated • Combined weight balancing with / without auxiliary energy • **Special accessories:** manually
Gate valves	• Manually operated • Pneumatically operated • Electrically operated
Connections on vehicle side	• Flanged • Lapped flanged • Quick coupling • Dry coupling • Others
Breakaway coupling	• Browden wire controlled • Shear pin controlled • Hydraulically activated

By combining different dimensions (see table left) **IGATEC Bottom Loading Systems** can be configured for nearly every liquid and gaseous fluid.

Furthermore optional features (see table below) can be added to the loading system.

Optional Features:

Vapor return line	• Vapor return arm
PTFE-lining	
Type of heating	• 100% double jacket, incl. swivel joints • Double jacket, tubes and elbows only • Double jacket, tubes only • Electrically
Heating fluids	• Hot water • Steam • Thermal oil
Piggable	

Special accessoires	• Groanding sensor • Rinsing and decompression units